To search page

Late 1960s

Beginnings of MOS memory

~ Integrated Circuit ~

The first semiconductor memory was a bipolar RAM. The bipolar RAM started to be developed since the mid-1960s, and they were sold by Fairchild, Sylvania, TI, Intel etc. MOS SRAMs appeared somewhat later than bipolar RAMs. The first commercially successful MOS RAM was Intel 's 256-bit PMOS SRAM 1101, released in 1969, but there were several accumulated activities before that.
Fairchild developed 64-bit MOS SRAM from 1964 to 1968. In Japan, NEC announced an associative memory in the title of "A 150 ns Associative Memory Using Integrated MOS Transistors" at ISCCC in 1966. NEC later developed a 144-bit NMOS SRAM memory in 1968 and announced it at the ISSCC in the following year. It had memory cells composed of six enhanced NMOS and was mounted on DIPS-1, a large-scale computer of the Nippon Telegraph and Telephone Public Corporation.
Since SRAM is composed of flip-flop type memory cells, it was in the extension of the conventional circuit using individual transistors, but DRAM was a new concept. Regarding the basic idea of DRAM, IBM's Robert H. Dennard devised a 1-transistor DRAM cell and filed a patent in 1968.

Intel began developing DRAM of three-transistor cells in 1969. Three-transistor cells have larger cells than one transistor cells, but since the cells themselves have an amplifying function, it is easy to design peripheral circuits such as sense amplifiers. Intel's first product was a 1kbit PMOS DRAM 1102 developed jointly with Honeywell. The product name of 1102 had the meaning of the second product of PMOS memory. 1101 is a 256-bit SRAM, and 1103 is the famous 1-Kbit DRAM. 1102 was announced at the ISSCC in 1970, but it was never marketed as such. Intel developed 1103, implementing a major revision to 1102, and it released the product in October 1970, and made an explosive success.
In the era of 4k-bit DRAM, one transistor type DRAM proposed by Dennard became mainstream.

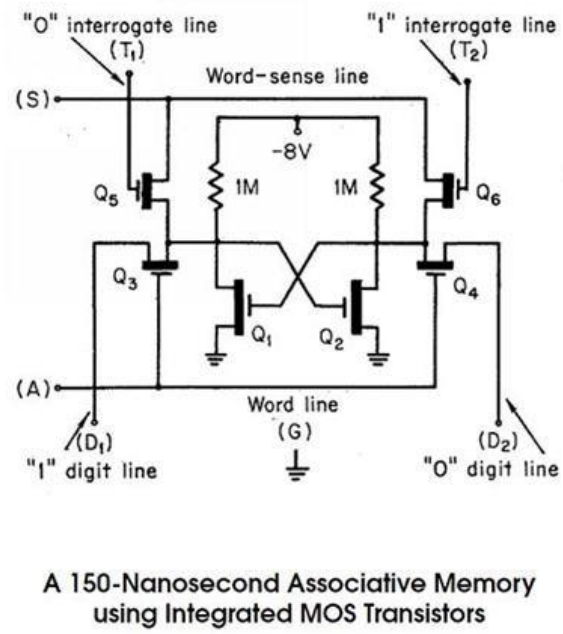

Fig. Associative Memory by NEC at ISSCC in 1966

Version 2019/1/23